University of Hertfordshire

School of Physics, Engineering and Computer Science
University of Hertfordshire

BEng (Hons) Electrical and Electronic Engineering

5FTC2140
Connected Systems and IoT

Smart Agriculture IoT System

CW 02

Group System Integration and Implementation

UH ID	**: 23115093**
Batch	**: Batch 08**
Date of Submission	**: 03/01/2026**
Lab Tutor	**: Sir. Chandima Tennakoon**

Table of Contents

1. Introduction 4
2. System Design & Architecture 4
2.1 Node 1 – Environmental Monitoring 5
2.2 Node 2 – Soil Monitoring and Irrigation Control 5
2.3 Gateway – Central Communication and Processing Unit 6
2.4 Dashboard – Data Visualization and Remote Access 7
3. Implementation 7
3.1 Development Process 7
3.2 Node 1 – Environmental Monitoring 8
3.3 Node 2 – Soil Monitoring and Irrigation Control 8
3.4 Gateway – Central Communication and Processing Unit 9
3.5 Dashboard – Data Visualization and Remote Access 10
3.6 System Integration and Practical Issues 11
3.7 Implementation Constraints 11
4. Testing and Evaluation 11
4.1 LoRa Range and Signal Strength Analysis 12
4.2 End to End Data Transmission Performance 13
4.3 Reliability and Stability Analysis 13
4.4 Power Efficiency Considerations 14
4.5 Overall Evaluation 14
5. Quality Management and Sustainability 15
6. Individual Contribution 16
7. Conclusion 16
8. References 16
9. Appendix 17

List of Figures

Figure 1- Overall System Architecture of the Multi-Node IoT System 4
Figure 2- Block Diagram of Node 1 – Environmental Monitoring 5
Figure 3- Block Diagram of Node 2 – Soil Monitoring and Irrigation Control 6
Figure 4- Block Diagram of Gateway – Central Communication and Processing Unit 6
Figure 5- Initial Breadboard Prototype for Node Testing 7
Figure 6- Final Hardware Implementation of Node 1 8
Figure 7- Final Hardware Implementation of Node 2 with Pump and Flow Sensor 8
Figure 8- Gateway Hardware Assembly with ESP32 and OLED Display 9
Figure 9- Web-Based Dashboard Interface with Real-Time Monitoring 10
Figure 10- Node 2 Circuit Schematic (ESP32-C3 with Pump and Flow Sensor) 17
Figure 11- Gateway Circuit Schematic (ESP32 with OLED) 17
Figure 12- Node 1 Circuit Schematic (Arduino Nano with DHT11 and LDR) 18
Figure 13- Final Integrated Multi-Node IoT System Setup 18

1. Introduction

In today's world, IoT systems are increasingly used in real-life applications. One important area is agriculture, especially for monitoring environmental conditions and improving irrigation efficiency. However, in this project our focus was not only the agricultural application itself, but mainly how different communication technologies and microcontroller-based systems can be integrated into one complete and reliable IoT architecture. As EEE students, we were interested in understanding how sensors interface with microcontrollers and how LoRa, Wi-Fi, and Bluetooth can work together in a practical embedded system.

The aim of this project is to design and implement a multi-node Smart Agriculture IoT system capable of monitoring environmental and soil conditions in real time while controlling a water pump. The system consists of two sensor nodes and one central gateway. In each node, the microcontroller reads sensor data through digital GPIO, analog-to-digital conversion (ADC), and interrupt-based inputs depending on the sensor type. Node 1 measures temperature, humidity, and light intensity, while Node 2 measures soil moisture and water flow and controls the irrigation pump using a relay module.

Both nodes transmit structured data packets to the gateway using LoRa communication. The LoRa module communicates with the microcontroller through SPI interface, enabling reliable long-range wireless transmission with low power consumption. The gateway, developed using an ESP32, receives LoRa data, displays values on an OLED screen using I2C communication, and forwards the information to a web-based dashboard via Wi-Fi. Bluetooth is also integrated for local access and configuration.

Overall, this project demonstrates how embedded systems, sensor interfacing, and multiple wireless communication protocols can be integrated to build a scalable and efficient IoT solution for smart monitoring and irrigation control.

2. System Design & Architecture

The system was designed as a distributed multi-node IoT architecture to clearly separate sensing, control, and communication tasks. Instead of using a single controller for the entire system, we divided the design into three main components: Node 1 – Environmental Monitoring, Node 2 – Soil Monitoring and Irrigation Control, and the Gateway – Central Communication and Processing Unit. This modular structure improves reliability, simplifies debugging, and allows the system to be expanded in the future.

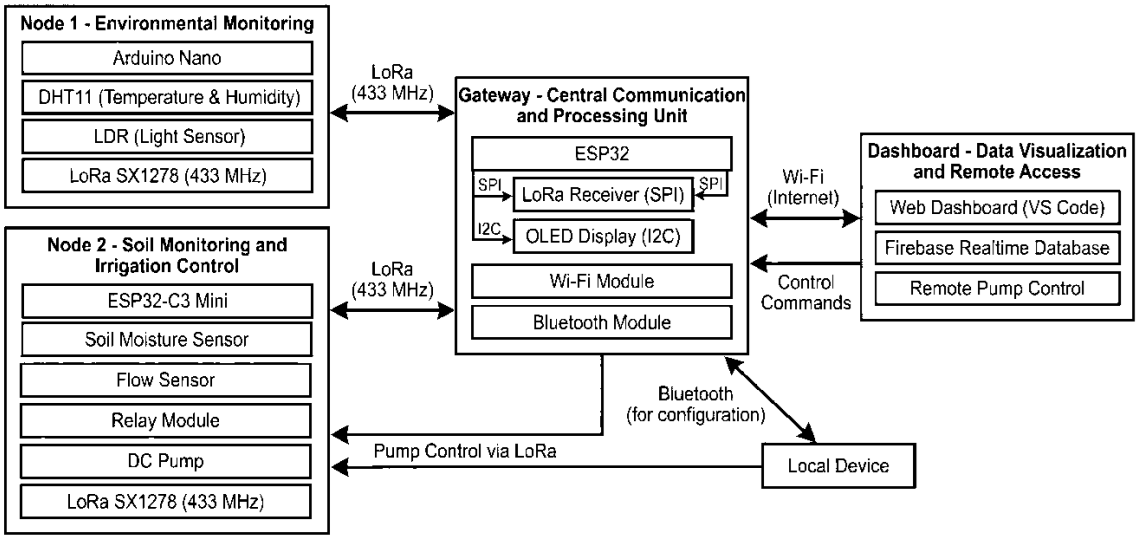

Figure 1- Overall System Architecture of the Multi-Node IoT System

The overall communication architecture follows a star topology. Node 1 and Node 2 both communicate directly with the Gateway using LoRa (SX1278, 433 MHz). The Gateway then forwards the processed data to the Dashboard – Data Visualization and Remote Access using Wi-Fi. Bluetooth is also integrated at the gateway level to allow local access and configuration when internet connectivity is unavailable.

2.1 Node 1 – Environmental Monitoring

Node 1 is responsible for monitoring environmental parameters such as temperature, humidity, and light intensity. An Arduino Nano is used as a microcontroller because it is stable and suitable for basic sensor interfacing.

The DHT11 sensor is connected to a digital GPIO pin to measure temperature and humidity. The LDR is connected through a resistor divider circuit to the analog input (A0), allowing light intensity to be measured using the microcontroller's internal ADC.

Power is supplied using a 3.7V battery boosted to 5V. A 3.3V regulator provides stable voltage for the LoRa module. Communication between the Arduino Nano and LoRa module is achieved through SPI interface (SCK, MISO, MOSI, CS).

After collecting the sensor readings, Node 1 creates a structured data packet including Node ID and environmental values. This packet is transmitted wirelessly to the Gateway using LoRa. This node performs sensing and transmission only.

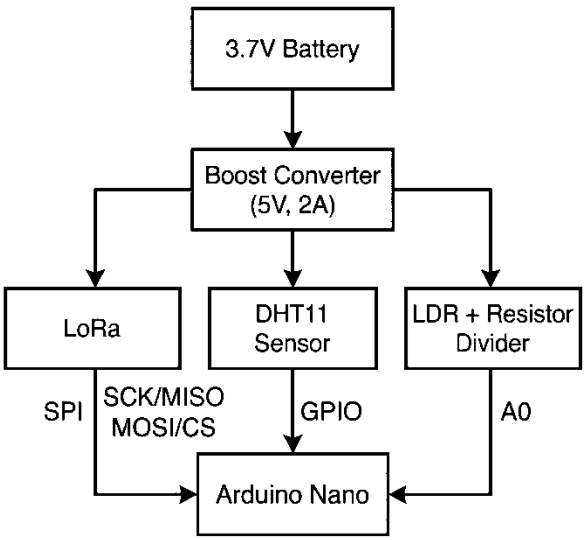

Figure 2- Block Diagram of Node 1 – Environmental Monitoring

2.2 Node 2 – Soil Monitoring and Irrigation Control

Node 2 performs both sensing and actuation. It monitors soil moisture and water flow and controls the irrigation pump accordingly. An ESP32-C3 Mini is selected due to its lower power consumption and sufficient ADC and interrupt capabilities.

The soil moisture sensor is connected to the ADC pin of the ESP32-C3 to measure analog voltage. The flow sensor is connected to an interrupt pin to count pulses and calculate flow rate. A relay module is controlled through a GPIO pin to switch the DC pump ON or OFF.

When soil moisture falls below a predefined threshold (e.g., 55%), the microcontroller automatically activates the pump. The flow sensor verifies water movement while the pump is operating. This improves system reliability and prevents dry running.

Node 2 builds a data packet including soil moisture value, flow rate, and pump status, and transmits it to the Gateway via LoRa. Separate power regulation is used for the motor to avoid voltage fluctuations affecting the controller.

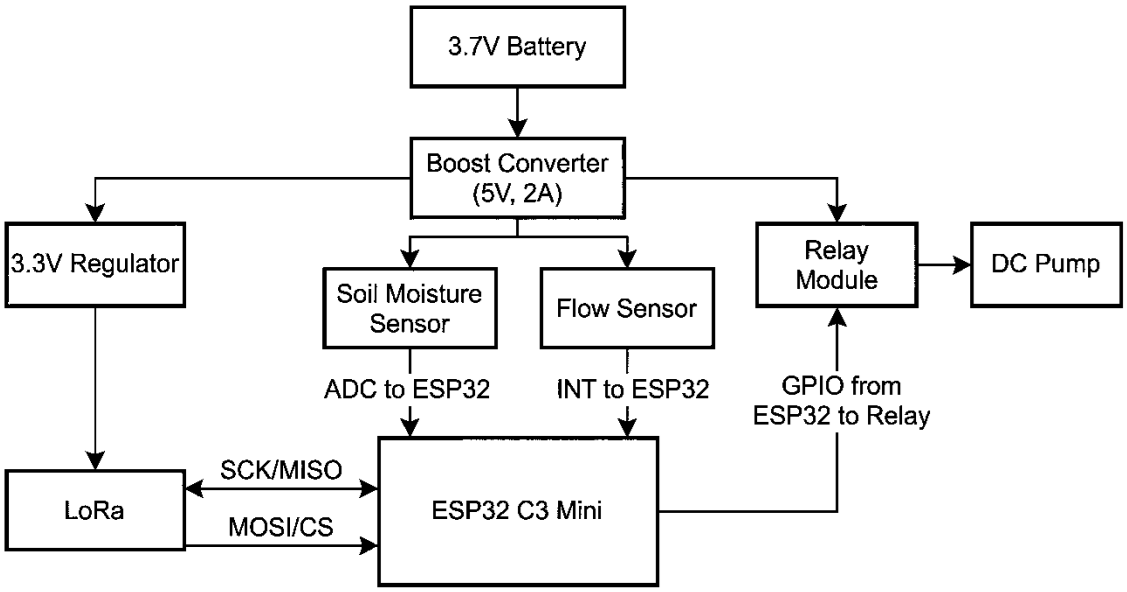

Figure 3- Block Diagram of Node 2 – Soil Monitoring and Irrigation Control

2.3 Gateway – Central Communication and Processing Unit

The Gateway acts as the central controller of the entire system. It receives LoRa packets from Node 1 and Node 2, processes the data, displays it locally, and forwards it to the Dashboard.

An ESP32 is used because it supports Wi-Fi, Bluetooth, and multitasking. The LoRa module communicates with the ESP32 via SPI interface. The Gateway continuously listens to packets and identifies each node using Node ID.

Sensor values are displayed on a 1.3” OLED screen using I2C communication (SDA, SCL). The Gateway then sends data to the Dashboard using Wi-Fi for remote monitoring. Bluetooth provides local access and manual configuration.

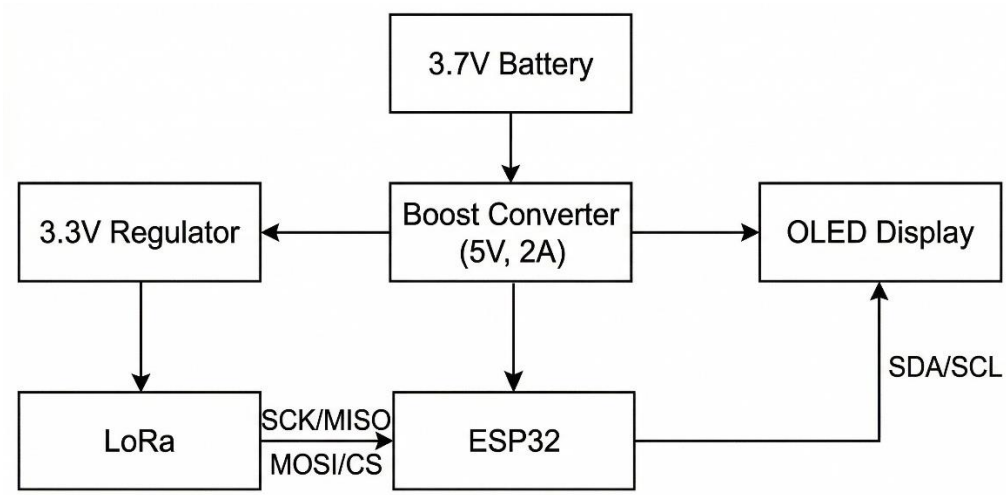

Figure 4- Block Diagram of Gateway – Central Communication and Processing Unit

2.4 Dashboard – Data Visualization and Remote Access

The Dashboard receives data from the Gateway via Wi-Fi and displays real-time environmental and soil parameters. It shows temperature, humidity, light intensity, soil moisture, flow rate, and pump status.

The Dashboard also allows manual pump control, sending commands back to the Gateway when required. This completes the full IoT loop from sensing to remote monitoring and control.

Overall, this architecture integrates microcontroller-based sensor interfacing (GPIO, ADC, interrupt), LoRa wireless communication (SPI), and internet connectivity (Wi-Fi) into one complete IoT system. The modular design ensures scalability, reliability, and structured communication between all components.

3. Implementation

This section describes how the proposed Smart Agriculture IoT system was physically implemented and integrated. Each node was first developed and tested individually before performing full system integration. The implementation process focused on hardware wiring, sensor interfacing, communication configuration, dashboard integration, and system debugging.

3.1 Development Process

During the initial stage, all circuits were first assembled and tested on a breadboard. This allowed us to verify sensor readings, LoRa communication, and control logic before making the hardware permanent. Breadboard testing helped identify wiring mistakes, unstable connections, and power-related issues safely.

Both Node 1 and Node 2 were tested using jumper wires to confirm ADC readings, interrupt signals, and relay switching. LoRa communication between nodes and the Gateway was also verified in this temporary setup.

After confirming stable operation, the circuits were transferred to a soldered prototype board. Soldering improved connection reliability and reduced noise issues, especially in Node 2 where the motor draws higher current. This two-stage approach (breadboard → soldered board) improved overall system stability and reduced debugging during final integration.

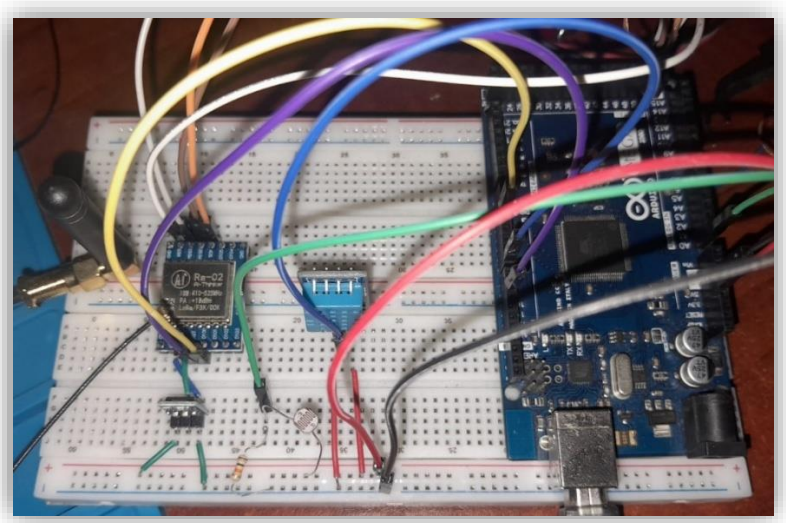

Figure 5- Initial Breadboard Prototype for Node Testing

3.2 Node 1 – Environmental Monitoring

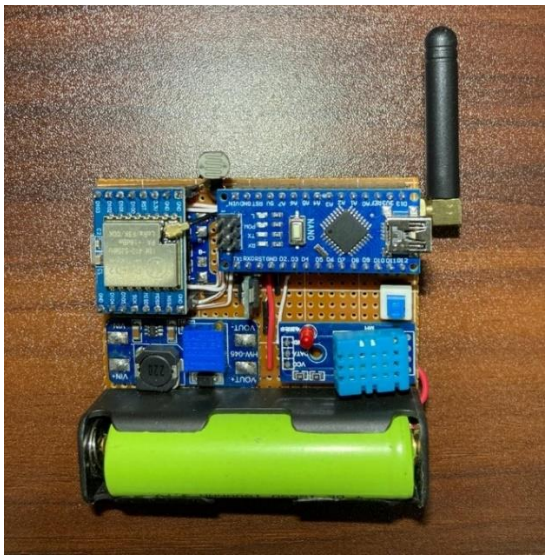

Figure 6- Final Hardware Implementation of Node 1

Node 1 was implemented using an Arduino Nano as the main microcontroller. The DHT11 sensor was connected to a digital GPIO pin to measure temperature and humidity values. Since the LDR produces an analog voltage depending on light intensity, it was connected using a resistor divider circuit to the analog input (A0), allowing the Arduino's internal ADC to convert voltage into digital values.

The LoRa SX1278 module was interfaced using SPI communication lines (SCK, MISO, MOSI, CS). During programming, the Arduino was configured to periodically read sensor values, calibrate the analog reading from the LDR, and format the data into a structured payload including Node ID and sensor parameters.

Power was supplied using a 3.7V battery with a boost converter to provide stable 5V output. A 3.3V regulator ensured safe operation of the LoRa module. Individual testing confirmed correct sensor readings and successful LoRa transmission before integration with the Gateway.

This node was fully implemented by Thevin.

3.3 Node 2 – Soil Monitoring and Irrigation Control

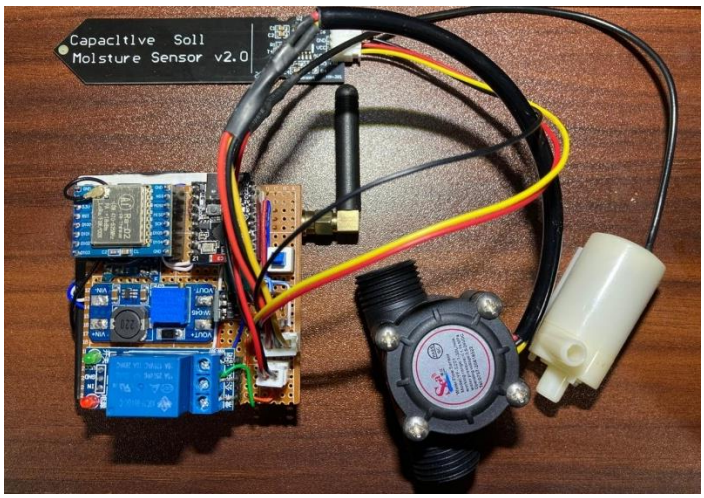

Figure 7- Final Hardware Implementation of Node 2 with Pump and Flow Sensor

Node 2 was implemented using an ESP32-C3 Mini due to its lower power consumption and support for ADC and interrupt-based inputs. The soil moisture sensor was connected to an ADC pin to measure analog voltage corresponding to soil moisture level. The flow sensor output produces pulse signals proportional to water flow rate, so it was connected to an interrupt-capable GPIO pin. This allowed accurate counting of pulses without missing events.

A 5V relay module was connected to a GPIO pin to control the DC pump. During implementation, separate voltage regulation was used for the pump motor because motor current can cause voltage fluctuations that reset the microcontroller.

In the embedded program, the ESP32 continuously monitors soil moisture and compares it with a predefined threshold (55%). If the moisture level drops below this value, the relay is activated, switching the pump ON. At the same time, the flow sensor is monitored to confirm water movement. If no flow is detected while the pump is ON, a fault condition is identified.

After processing, Node 2 builds a structured data packet including soil moisture value, flow rate, and pump status. The data is transmitted to the Gateway using LoRa via SPI interface.

This node was developed and programmed by Praveen.

3.4 Gateway – Central Communication and Processing Unit

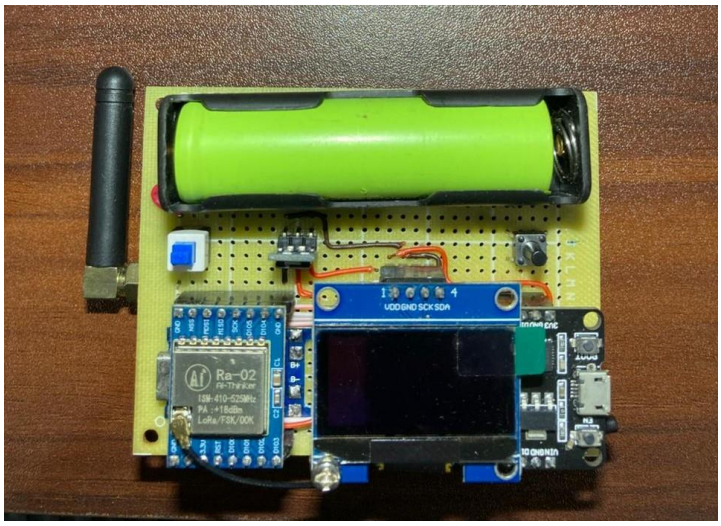

Figure 8- Gateway Hardware Assembly with ESP32 and OLED Display

The Gateway was implemented using an ESP32 development board, acting as the central communication and processing unit of the system. The LoRa module was connected using SPI communication, while the 1.3” OLED display was connected using I2C (SDA, SCL).

The Gateway software was designed to continuously listen to LoRa packets from Node 1 and Node 2. When a packet is received, the Node ID is checked to determine the source. The received payload is then decoded and displayed on the OLED screen in real time.

For remote monitoring, the ESP32 connects to Wi-Fi and uploads data to the cloud database. The data was structured in JSON format before transmission, ensuring organized key-value storage in the database. The update interval was optimized to balance real-time performance and network stability.

Bluetooth functionality was also configured to allow local configuration and debugging without internet access.

I was responsible for implementing the Gateway hardware integration, SPI and I2C setup, packet decoding logic, Wi-Fi communication, and complete system integration between nodes.

3.5 Dashboard – Data Visualization and Remote Access

The Dashboard was developed to monitor all system parameters in real time and allow remote irrigation control. We built the dashboard using Visual Studio Code (VS Code) with HTML, CSS, and JavaScript. Instead of using a ready-made platform, we created the interface ourselves to understand how cloud integration works in an IoT system.

Google Firebase Realtime Database was used as the cloud platform. The Gateway sends sensor data through Wi-Fi in JSON format, and each parameter such as temperature, humidity, light intensity, soil moisture, flow rate, and pump status is stored as separate fields in the database. The dashboard connects to Firebase using its JavaScript API and automatically updates values when the database changes.

During testing, the average delay between data upload and display on the dashboard was approximately 300–500ms under normal Wi-Fi conditions.

Manual pump control was also implemented. When the user presses the control button, a command is written to Firebase. The Gateway continuously checks this field and forwards the command to Node 2 through LoRa. This completes the full data loop from cloud to actuator.

I was mainly responsible for designing the dashboard layout, configuring Firebase, and integrating it with the Gateway. Praveen assisted during system testing to verify correct command communication.

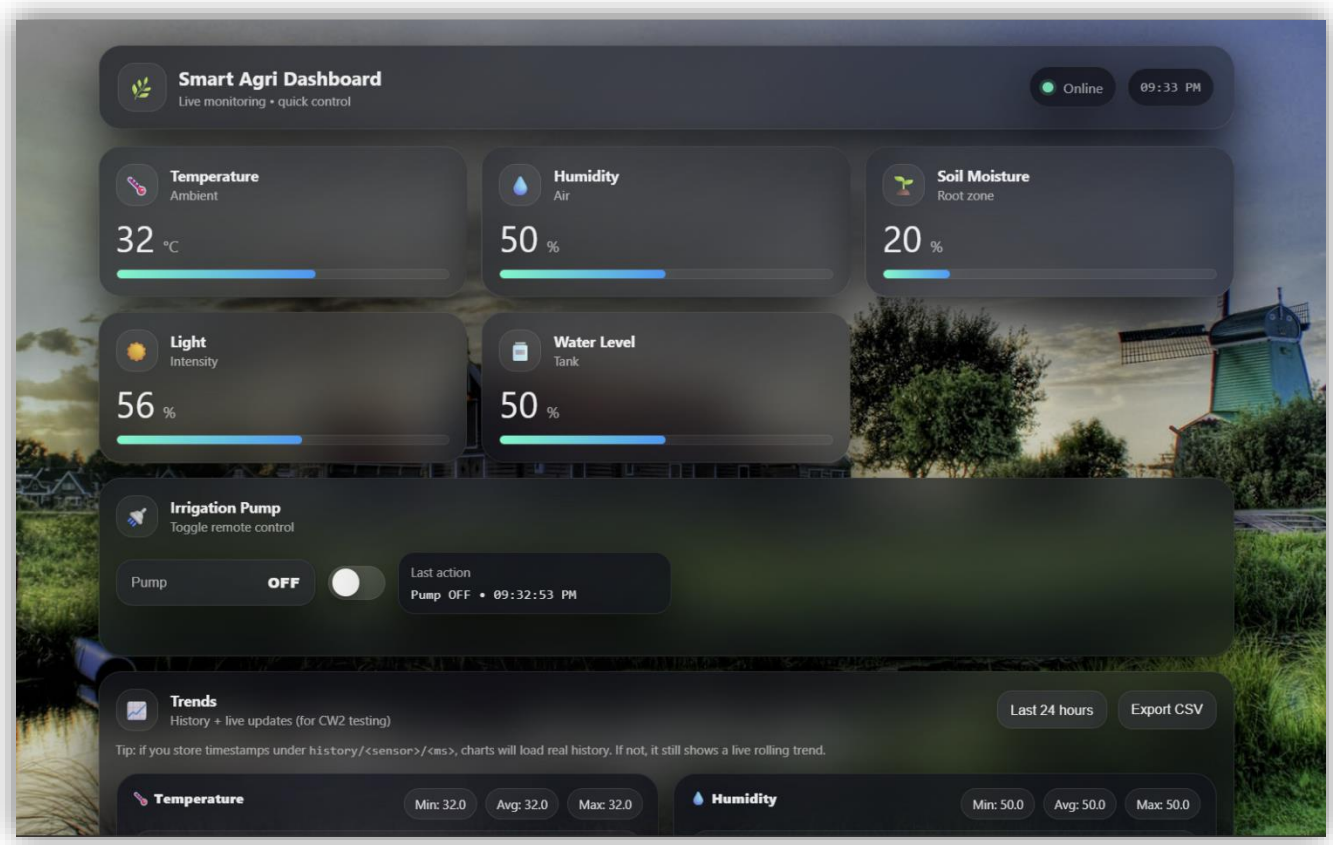

Figure 9- Web-Based Dashboard Interface with Real-Time Monitoring

3.6 System Integration and Practical Issues

After completing individual node development, we integrated the full system step by step. First, Node 1 was connected with the Gateway and LoRa communication was tested. After confirming stable transmission, Node 2 was added and tested for soil monitoring and pump control. Finally, both nodes were tested together to check whether Gateway could receive and process data from both sides correctly.

The main problem occurred in Node 2 when the motor was switched ON. At the moment the pump was activated, the LoRa connection between Node 2 and the Gateway was lost. Sometimes the ESP32-C3 also restarted unexpectedly. After checking the circuit, we understood that the DC motor was causing voltage drop and electrical noise because it draws high current during startup. This affected the stability of the LoRa module and microcontroller.

To solve this, we separated the motor power supply from the control circuit using a dedicated boost converter. We also improved grounding and reduced loose wiring connections. After applying these changes, LoRa communication remained stable even when the pump was running.

Once these issues were resolved, the system operated reliably with correct sensor updates, pump control, OLED display, and dashboard synchronization.

3.7 Implementation Constraints

During implementation, several practical factors had to be considered to ensure stable system operation. Since the system is powered using batteries and boost converters, voltage stability was very important. Especially for the LoRa module, a stable 3.3V supply was required to maintain reliable communication. Any fluctuation in voltage affected packet transmission.

Wiring quality was also an important factor. In the early breadboard stage, loose jumper connections sometimes caused unstable readings and communication drops. For this reason, after successful testing, we transferred the circuits to a soldered prototype board to improve reliability and reduce connection errors.

Sensor behavior also requires attention. The soil moisture sensor readings can vary depending on soil type and probe placement, so basic calibration was done before setting the threshold value. The DHT11 sensor has limited accuracy and response speed, so the reading interval was kept reasonable to avoid unnecessary rapid updates.

Considering these practical aspects helped achieve a more stable and functional final implementation.

4. Testing and Evaluation

After completing the full implementation and system integration, structured testing was carried out to evaluate performance in terms of communication range, transmission delay, system reliability, and power efficiency. The purpose of this stage was not only to verify whether the system works, but also to analyze how stable and efficient it performs under increasing communication distance.

Testing was performed step by step: first individual node validation, then LoRa communication testing at different distances, and finally full system-level evaluation including dashboard synchronization and irrigation control.

4.1 LoRa Range and Signal Strength Analysis

To evaluate LoRa communication performance, range testing was conducted by gradually increasing the distance between the sensor node and the Gateway. At each distance, multiple packets were transmitted and received while monitoring RSSI (Received Signal Strength Indicator), SNR (Signal to Noise Ratio), and packet success rate.

Testing distances ranged from short-range (1 m) up to extended distance (150 m) under semi-open outdoor conditions.

Table 1.1 – LoRa Communication Performance Results

Distance (m)	Avg SNR (dB)	Avg RSSI (dBm)	Success Rate (%)
1	9.5	-95	100
10	6.7	-118	100
20	-4.9	-122	97
40	-11	-124	90
60	-15	-129	85
80	-19	-133	78
100	-21	-135	70
120	-23	-137	60
150	-25	-139	48

As expected, RSSI decreases gradually as distance increases due to signal attenuation and environmental obstacles. SNR values also decrease and become negative beyond approximately 20 meters, indicating that signal strength approaches the noise floor.

However, even at 100 meters, communication remained functional with around 70% packet success rate. This demonstrates that LoRa is suitable for distributed agricultural environments where nodes may be installed far from the central gateway.

At 150 meters, packet success rate reduced significantly, which indicates the practical range limit under the current antenna configuration and environmental conditions.

Graph 4.1: RSSI vs Distance During LoRa Testing

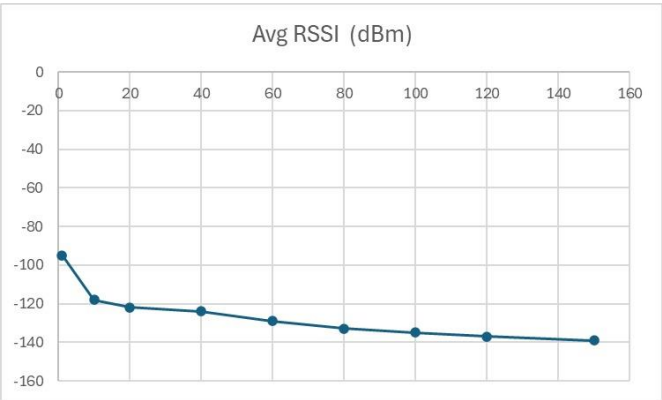

The graph clearly shows a near linear decrease in RSSI as distance increases, confirming expected radio propagation behavior.

4.2 End to End Data Transmission Performance

Transmission performance was evaluated by measuring delay between:

Sensor reading → LoRa transmission → Gateway reception → Firebase upload → Dashboard display.

Node transmission interval was configured to 5 seconds. A small time offset (around 1–2 seconds difference between nodes) was added to prevent simultaneous transmission.

Table 1.2 – Data Transmission Delay

Stage	Average Delay
Node → Gateway (LoRa)	200–300ms
Gateway → Firebase (Wi-Fi)	300–500ms
Total End to-End Delay	500–800ms

The total delay from sensor reading to dashboard visualization remained below 1 second in most cases. For agricultural applications, this delay is acceptable because irrigation systems do not require millisecond-level response time.

Occasional delay spikes were observed when Wi-Fi signal strength fluctuated, but automatic reconnection logic ensured that no permanent disconnection occurred.

4.3 Reliability and Stability Analysis

Reliability testing focused on long-duration operation and motor-induced interference.

Initially, when the pump motor was switched ON, LoRa communication temporarily failed. The Gateway stopped receiving packets, and sometimes the ESP32-C3 restarted. This was traced back to voltage drop and electrical noise caused by the motor startup current.

After separating the motor power supply and improving grounding (as explained in Section 3), the issue was resolved.

Table 1.3 – Reliability Observations

Test Condition	Result
Continuous 2-hour operation	Stable
Pump ON during transmission	Stable after power fix
Simultaneous Node Transmission	Stable with timing offset
Wi-Fi Temporary Disconnection	Auto-recovered

Continuous operation testing showed no major system crash or communication breakdown after power improvements. This confirms that the system is stable under normal working conditions.

4.4 Power Efficiency Considerations

Since the system operates using lithium-ion batteries and boost converters, power efficiency was evaluated based on estimated current consumption under different operating modes. Battery life was calculated using the following approximation:

$$\text{Battery Life} \approx (\text{Battery Capacity} \times \eta) / \text{Load Current}$$

where $\eta \approx 0.85$ represents the boost converter efficiency

Table 1.4 – Estimated Battery Life Based on Measured Current

Unit	Battery	Mode	Avg Current (mA)	Estimated Life (h)
Gateway	1800mAh	Idle	160	9.5
		TX	180	8.5
		RX	260	5.8
Node 1	1800mAh	Idle	55	25
		TX	60	24
		RX	110	13.9
Node 2	3500mAh	Idle	95	26
		TX	105	24
		RX	150	17

From the results, it can be observed that **Gateway** has the highest power consumption due to continuous Wi-Fi connectivity and LoRa reception. In receiving mode (260 mA), the estimated battery life reduces to approximately 5.8 hours, which shows the Gateway is the most energy demanding component.

Node 1 – Environmental Monitoring shows the lowest power consumption. During idle mode (55 mA), it can operate for approximately 25 hours because it mainly performs periodic sensing and short LoRa transmissions.

Node 2 – Soil Monitoring and Irrigation Control consumes moderate power during idle operation (95 mA), but current increases during communication and control activity. Due to its larger 3500mAh battery, the estimated battery life remains between 17–26 hours depending on the operating mode.

These results confirm that operating mode strongly affects battery performance. Continuous reception, Wi-Fi usage, and pump operation are the main contributors to energy consumption. Future improvements such as deep sleep modes and reducing Wi-Fi active time could further improve energy efficiency.

4.5 Overall Evaluation

Based on the tests conducted, the system successfully achieved its main objective of integrating multiple communication protocols into one functional IoT architecture. LoRa was effective for local node communication, while Wi-Fi enabled cloud connectivity through Firebase. The separation of

communication layers proved to be a good design decision, ensuring stable operation even during continuous data transmission.

One important lesson from this project was the impact of hardware design on communication reliability. The motor-induced voltage drop issue in Node 2 clearly showed that power stability is critical in embedded systems. After separating the motor power supply from the control circuit, system stability improved significantly. This highlighted the importance of proper power management in IoT applications.

The measured end-to-end delay (below 1 second) is acceptable for agricultural monitoring and irrigation control. Since irrigation does not require instant response, the chosen transmission interval was appropriate.

The system also demonstrated successful bidirectional communication, where sensor data is sent to the dashboard and control commands are returned to the actuator.

5. Quality Management and Sustainability

Quality management was considered throughout the project to ensure stable and reliable system performance. During development, we followed a structured approach where each node was tested individually before full system integration. Breadboard testing was first used to identify wiring mistakes, unstable sensor readings, and communication errors. After confirming proper functionality, circuits were transferred to soldered boards to improve mechanical stability and reduce loose connections. This step improved overall system reliability.

A simple Quality Management approach was applied by following repeated testing, debugging, and validation at each stage. Communication between nodes and the Gateway was tested multiple times under different conditions. When the motor in Node 2 caused LoRa instability due to voltage drop, the issue was analyzed and corrected by separating the motor power supply from the control circuit. This shows risk identification and corrective action, which are important principles in QMS.

Risk analysis was also considered during design. Potential risks included power instability, communication failure, sensor noise, and unintended pump activation. These risks were reduced by using regulated power supplies, transmission timing control, averaging sensor readings, and implementing command validation before executing irrigation control.

From a sustainability perspective, energy efficiency was improved by using LoRa for low-power node communication and periodic sensing instead of continuous data transmission. Only the Gateway uses Wi-Fi, which reduces overall energy consumption. The irrigation logic activates the pump only when soil moisture falls below a defined threshold, preventing over-irrigation and supporting water conservation. Flow monitoring also allows tracking of water usage.

Rechargeable lithium-ion batteries were selected to reduce environmental impact compared to disposable batteries. Proper disposal of batteries and electronic components is recommended to minimize e-waste. Ethical considerations include restricting irrigation control to authorized users and preventing misuse through command validation mechanisms.

Overall, the system demonstrates attention to quality control, risk management, environmental sustainability, and responsible IoT system design.

6. Individual Contribution

In this project, I was mainly responsible for designing and implementing the Gateway – Central Communication and Processing Unit, as well as developing the Dashboard – Data Visualization and Remote Access system. My work focused on integrating communication protocols and ensuring the complete system operated as a unified IoT architecture.

For the Gateway, I handled the hardware setup of the ESP32, LoRa module (SPI communication), and OLED display (I2C interface). I programmed the Gateway to continuously receive LoRa packets from Node 1 and Node 2, decode the structured data using Node ID, and display real-time parameters on the OLED screen. I also implemented Wi-Fi connectivity and integrated the system with Google Firebase for cloud data storage.

For the Dashboard, I developed the web interface using Visual Studio Code with HTML, CSS, and JavaScript. I configured Firebase Realtime Database and implemented real-time data updates using the Firebase API. I also created the manual pump control feature, where commands from the dashboard are sent back through the Gateway to Node 2 via LoRa.

In addition, I contributed to full system integration, debugging communication issues, especially the motor-induced LoRa instability, and testing overall performance to ensure stable operation.

7. Conclusion

In this project, a multi-node Smart Agriculture IoT system was successfully designed and implemented by integrating LoRa, Wi-Fi, and cloud-based monitoring. The system demonstrated reliable environmental sensing, soil monitoring, and automated irrigation control through structured communication between Node 1, Node 2, and the Gateway. Real testing confirmed stable data transmission, acceptable delay performance, and practical operating range.

One of the key learning outcomes was understanding the impact of power design and communication timing on system reliability, especially during pump operation.

For future improvements, deep sleep modes can be implemented to enhance battery life, solar charging can be added for sustainability, and communication security mechanisms such as encryption can be introduced to improve system robustness and scalability.

8. References

[1] Semtech Corporation, *SX1276/77/78/79 – LoRa Modem Designer's Guide*, 2015. [Online]. Available: https://www.semtech.com

[2] Espressif Systems, *ESP32 Technical Reference Manual*, 2023. [Online]. Available: https://www.espressif.com

[3] Arduino, *Arduino Nano Documentation*, 2023. [Online]. Available: https://docs.arduino.cc

[4] Aosong Electronics, *DHT11 Temperature and Humidity Sensor Datasheet*, 2018.

[5] Dragino Technology, *LoRa Technology Overview*, 2022. [Online]. Available: https://www.dragino.com

9. Appendix

Circuit Schematics

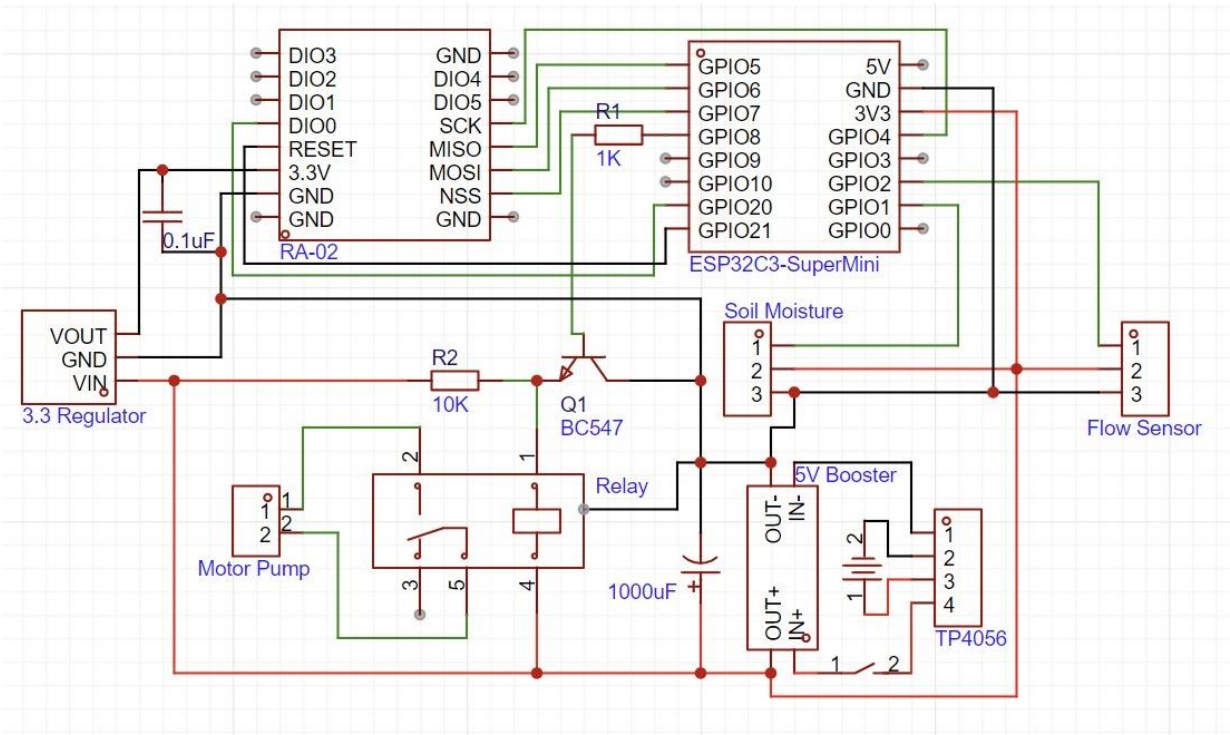

Figure 10- Node 2 Circuit Schematic (ESP32-C3 with Pump and Flow Sensor)

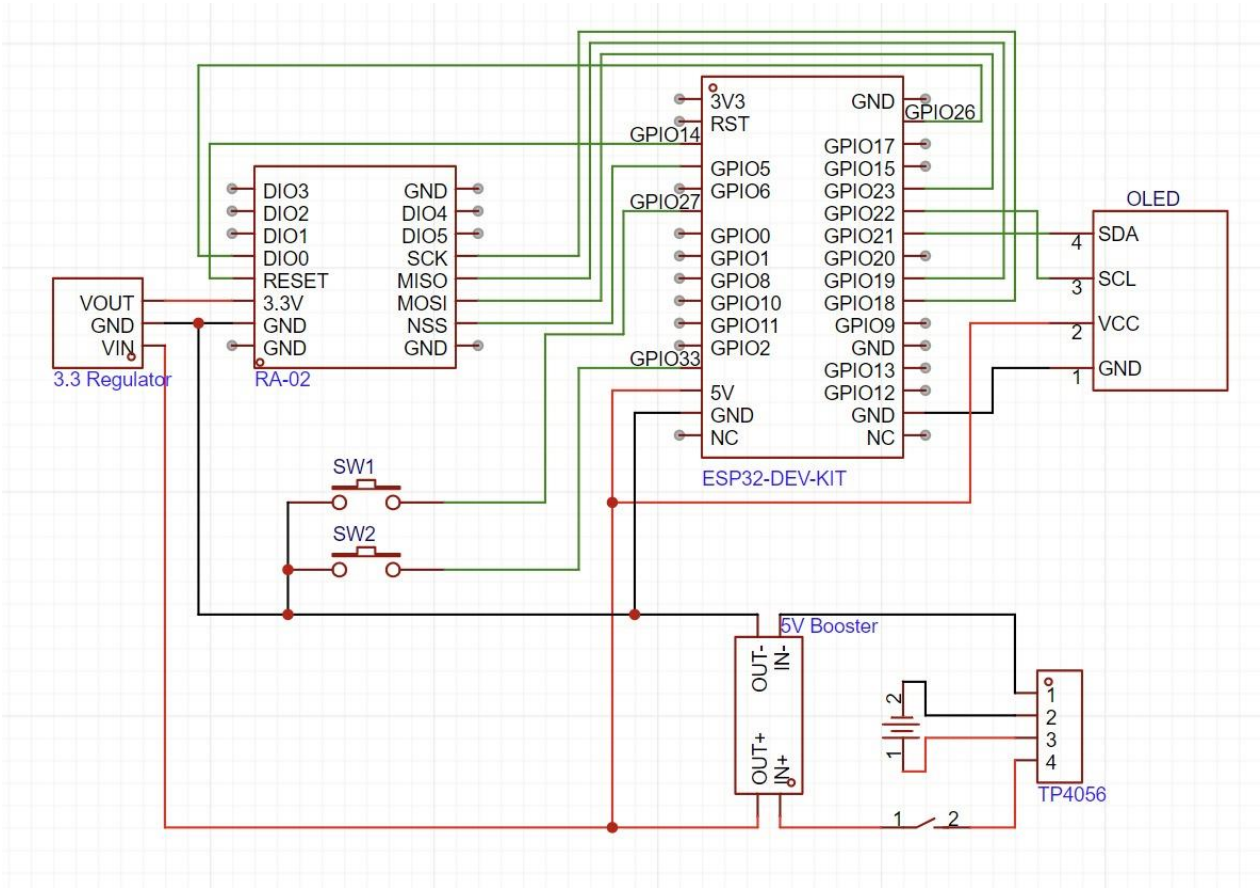

Figure 11- Gateway Circuit Schematic (ESP32 with OLED)

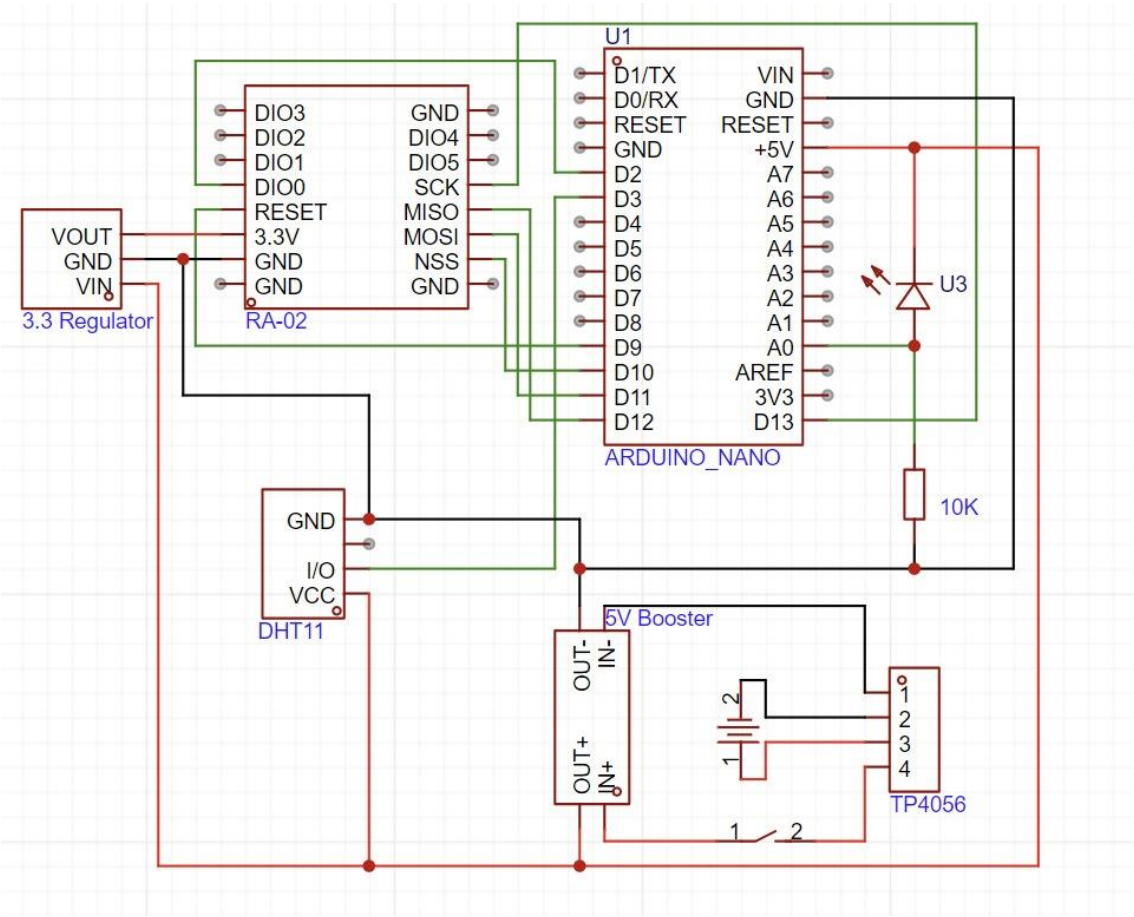

Figure 12- Node 1 Circuit Schematic (Arduino Nano with DHT11 and LDR)

Complete System Hardware

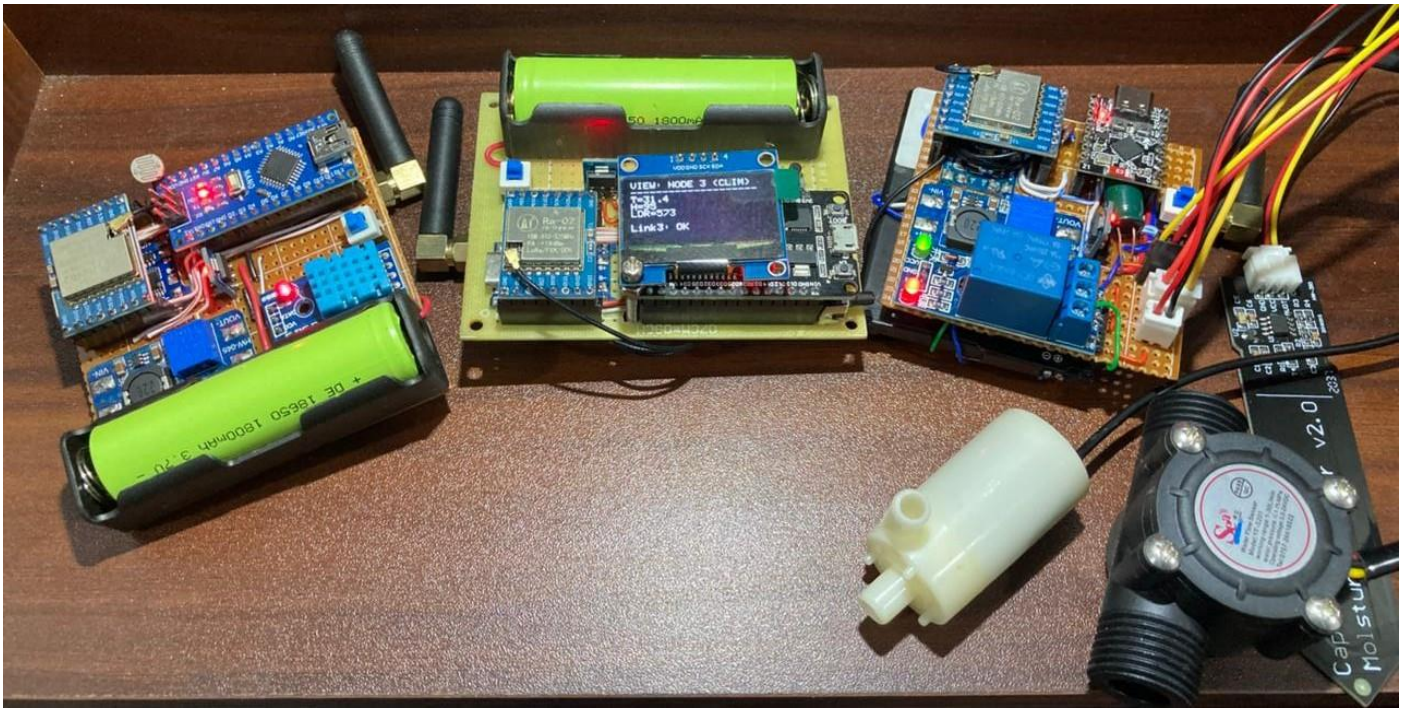

Figure 13- Final Integrated Multi-Node IoT System Setup

Project Roles and Responsibilities

Praveen Fernando (23114549)
Responsible for designing and implementing Node 2 – Soil Monitoring and Irrigation Control using the ESP32-C3 Mini. His work included soil moisture and flow sensor interfacing, relay and DC pump integration, soldering, testing, and debugging. He also assisted in LoRa packet decoding, OLED display integration at the Gateway level, and supported dashboard integration testing to verify correct remote pump control functionality.

Thevin Kenula (23115443)
Responsible for designing and implementing Node 1 – Environmental Monitoring using the Arduino Nano. His tasks included DHT11 and LDR interfacing, LoRa transmission setup, hardware debugging, and supporting soldering and system testing.

Dulina Nadith (23115093)
I was responsible for designing and implementing the Gateway – Central Communication and Processing Unit using the ESP32. I also led the development of the Dashboard – Data Visualization and Remote Access system using HTML, CSS, JavaScript, and Firebase Realtime Database.

My responsibilities included overall system integration, LoRa communication management, Wi-Fi configuration, Firebase database structure setup, dashboard interface design, real-time data synchronization, and debugging communication between nodes and the cloud.

All team members contributed to final integration testing and system validation.

Project Repository (Source Code & Files)

All source code and related project files are provided in a GitHub repository for transparency and reproducibility. The repository includes the firmware for Node 1 (Arduino Nano), Node 2 (ESP32-C3), and the Gateway (ESP32), as well as the dashboard source code developed in VS Code with Firebase integration. It also contains wiring notes, configuration files, and screenshots used during testing and implementation.

To access the repository, use:

https://github.com/Dulina10/5FTC2140-Connected-Systems-and-IoT-.git